JN SERIES

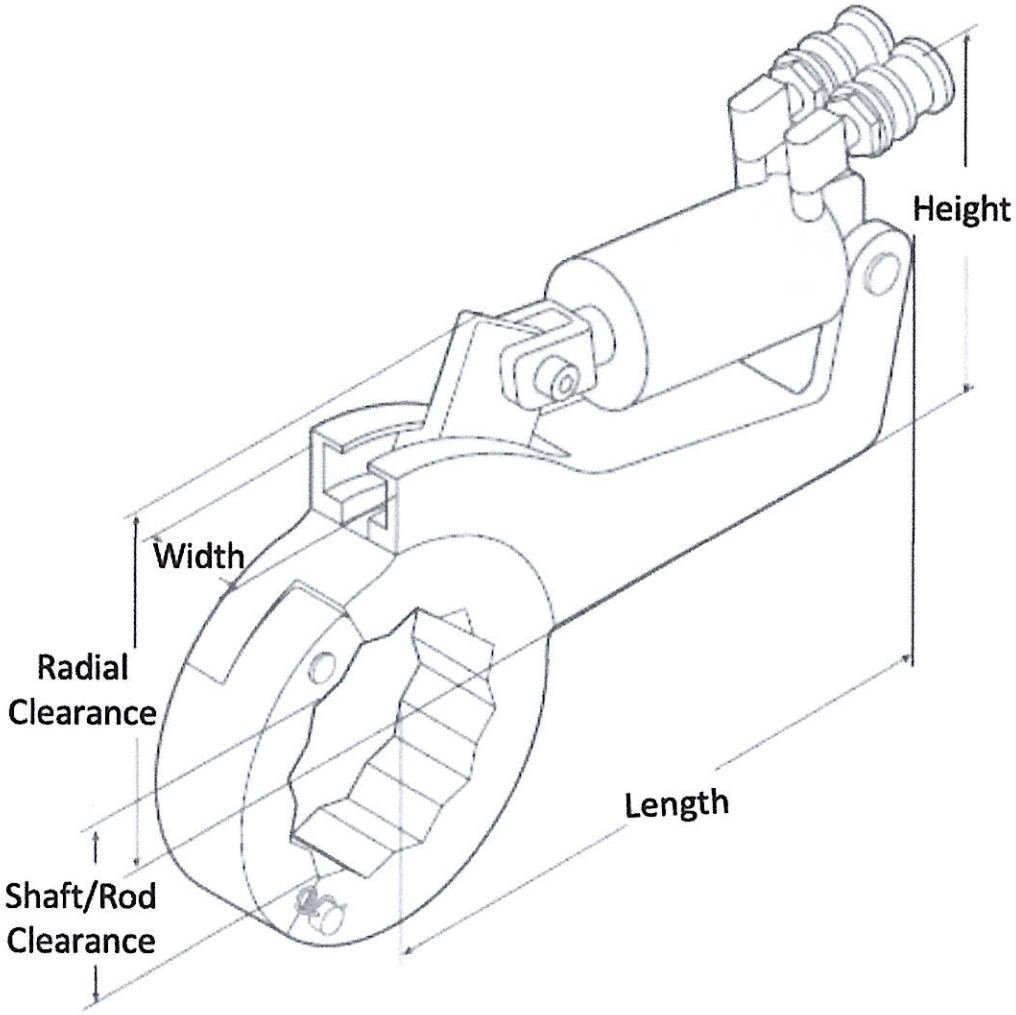

JN SERIES	MAX FT. LBS. @ 10,000 PSI	LENGTH	HEIGHT	WIDTH	RADIAL CLEARANCE	"SPLIT HEAD" RANGE	WEIGHT WITH HEAD
JN-4	3,650	13.044"	7.014"	1.950"	5.000"	2" - 4⊠ 2" - 4-5/8"	28 lbs.
JN-10	8,400	10.659"	7.014"	1.950"	5.000"	3⊠" - 4⊠" 2" - 4-5/8"	28 lbs.
JN-20	20,100	14.056"	9.117"	1.950"	7.372"	4⊠"- 6" 4-5/8" - 6"	40 lbs.
JN-30	32,000	16.000"	10.446"	1.950"	8.825"	6" - 8¼" 6" - 8-1/4"	57 lbs.
JN-40	38,396	19.126"	12.500"	2.950"	10.070"	4⊠"- 10" 4-5/8 - 9-1/4"	105 lbs